ASSEMBLY INSTRUCTION
MEDORA DRESSERS & MIRROR
ITEM CODE - 77301
Imported by Amart Furniture Pty Ltd, Qld, Brisbane Australia.
for any assistance to assembly or for missing parts please phone
Amart Furniture, Customer Service Freecall 1800 351 084

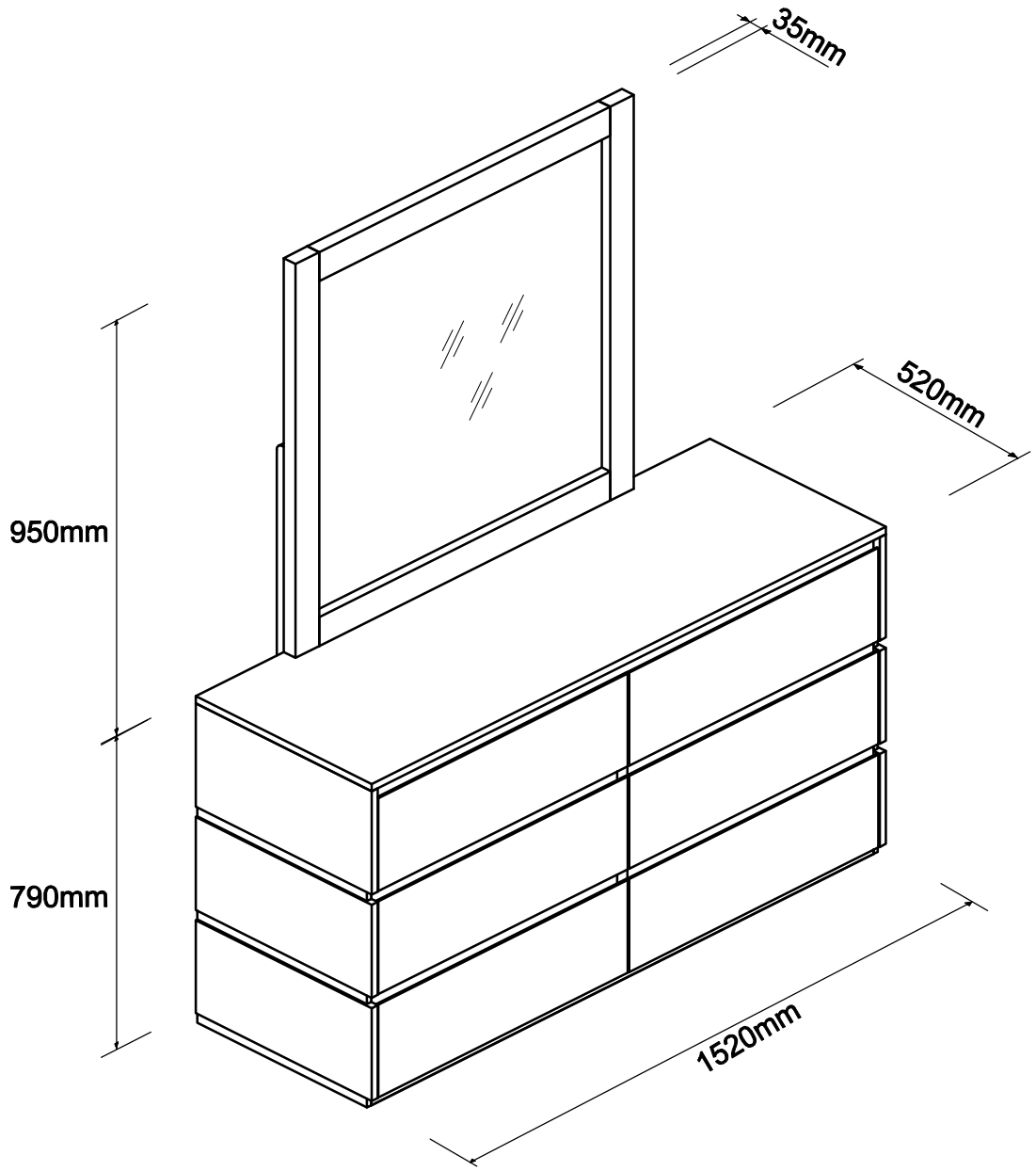

Imported by Amart Furniture Pty Ltd, Qld, Brisbane Australia.
for any assistance to assembly or for missing parts please phone
Amart Furniture, Customer Service Freecall 1800 351 084

PRE-ASSEMBLY PREPARATION

BEFORE YOU START :

1. Choose a clean, level, spacious assembly area. Avoid hard surfaces that may damage the product
2. Take care when lifting. Product should be assembled as near as possible to the point of use
3. Ensure that you have all required contents for complete assembly
4. Always read the assembly instructions carefully before beginning assembly.
5. Keep all hardware parts and packaging out of reach of small children.
6. Do not over tighten the screws and bolts as this may damage the threads

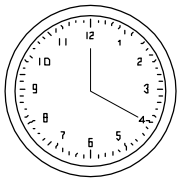	
ALLOW 20 MINUTES	2 PEOPLE REQUIRED
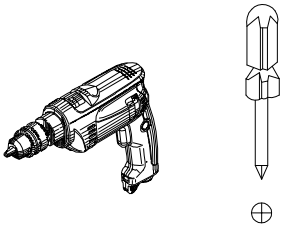 We recommend using screw driver to put this item together. However if you choose to use a power drill it must be used on LOW SPEED (LOW TORQUE) as too much pressure could damage the product.	
ADDITIONAL TOOLS REQUIRED	

WARNING

Serious or fatal injuries may occur from furniture toppling over. To help avoid this please follow the below recommendations:

- Install the provided "Tipping Kit" as per the instructions
- Never allow children to climb on or hang off of any part of this product
- Unless specifically designed to accommodate, do not set TVs or other heavy objects on top of this product

If this product has drawers:

- Place the heaviest items in lowest drawers
- Do not open more than 1 drawer at a time as this may cause the product to become unbalanced
- Do not tamper with or remove any drawer interlocking/running system

Note: The use of the provided "Tipping Kit" may reduce but not necessarily eliminate the risk of furniture toppling over. Please use this product with caution.

This is a permanent label. Do no attempt to remove!

PARTS LIST

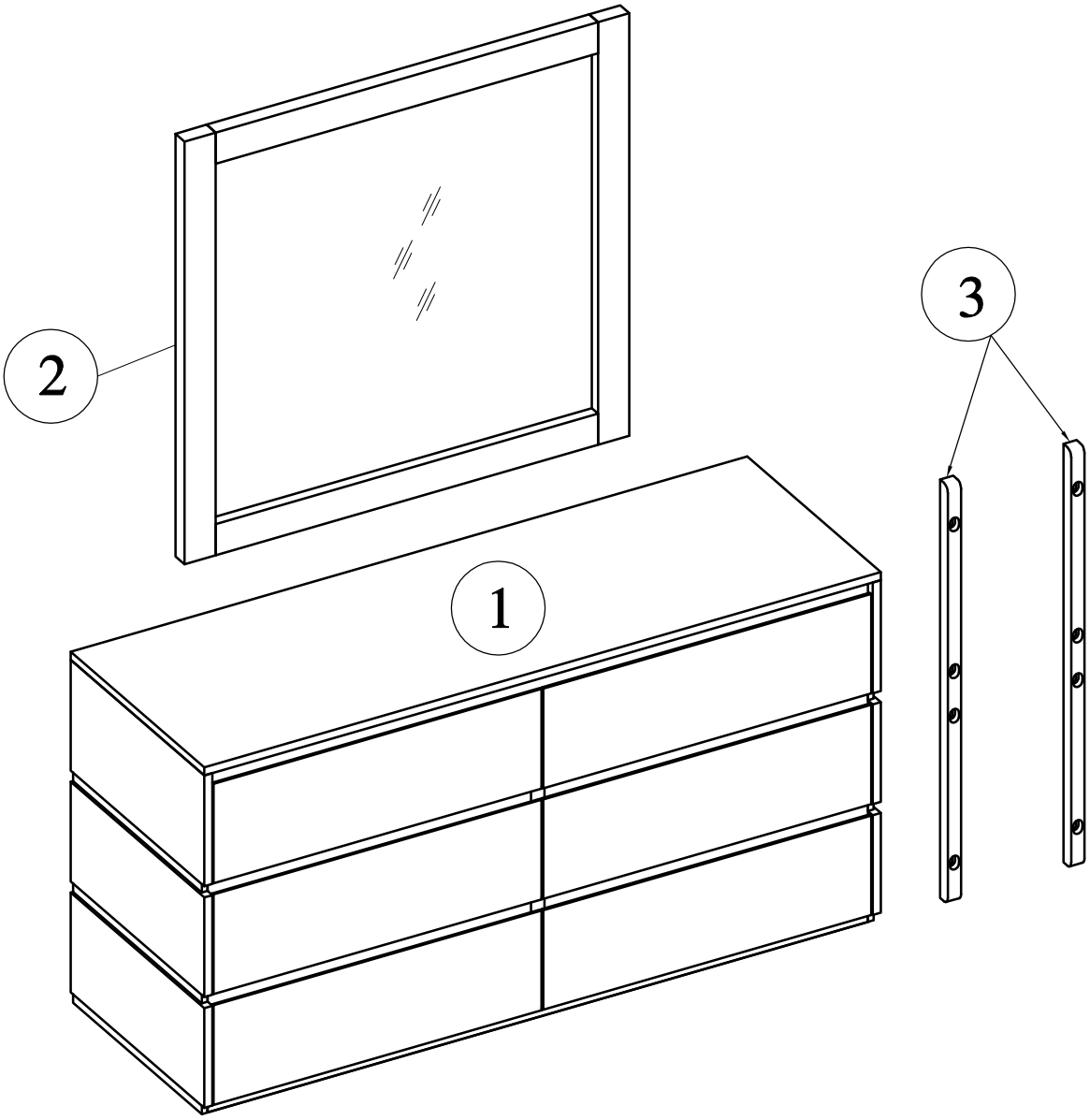

1	DRESSERS	1pc
2	MIRROR	1pc
3	MIRROR BRACES	2 pcs

A. Bolt	B. Spring Washer	C. Washer	D. Allen Key
M6 x 40 mm :08pcs	1.2mm x Ø8 :08pcs	2mm x Ø8/Ø20: 08pcs	M4 : 1pc

STEP 1

- Attach Bolts (A) with Spring Washers (B) and Washers (C) to Braces (3) using allen key (D).

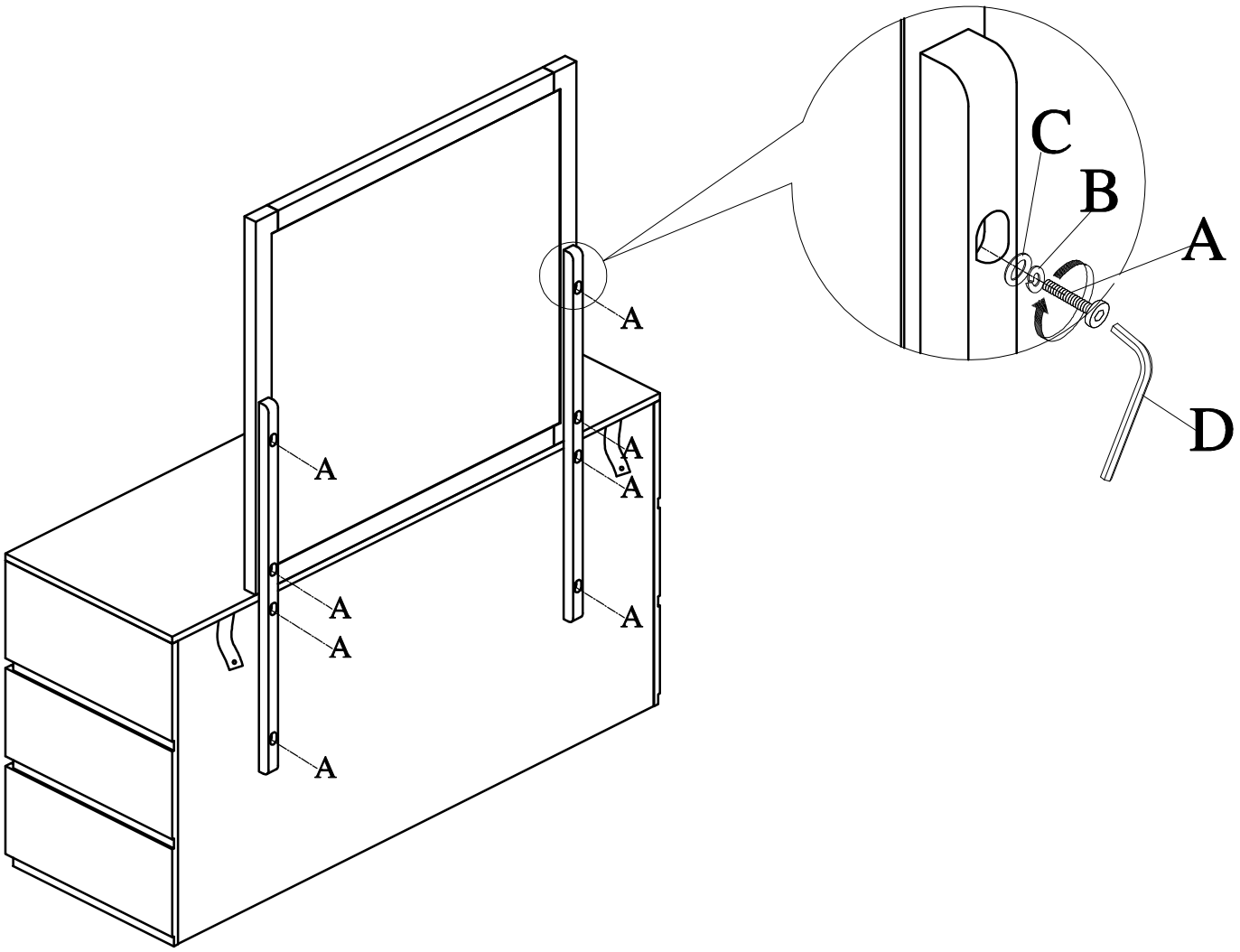

A. Bolt	B. Spring Washer	C. Washer	D. Allen Key
M6 x 40 mm 08pcs	1.2mm x Ø8 :08pcs	2mm x Ø8/Ø20 : 08pcs	M4 1pc

SAFETY BRACKETS INTRUCTIONS

This furniture poses a tipping risk and as such must be secured to a wall using the provided tipping kit.

1. Attach one Mounting Plate to the wall with the Large Screws. Make sure to attach the Mounting Plate into a stud. If mounting into brick or masonry you will need to acquire wall anchors.

2. Attach the second Mounting Plate to the funiture frame with the Short Screws.

3. Move the funiture to its final position. Thread a Wall Strap through the both Mounting Plates and tighten until snug. Do not over tighten.

4. Make sure that the Mounting Plates are firmly attached to the wall and furniture and that the Wall Strap is snug.

HARDWARE

A. Mounting Plate	B. Wall Strap	C. Large Screw	D. Small Screw
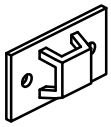 4 pcs	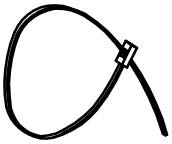 Ø4 x 15mm 2 pcs	Ø5 x 40mm 4 pcs	Ø4 x 20mm 4 pcs

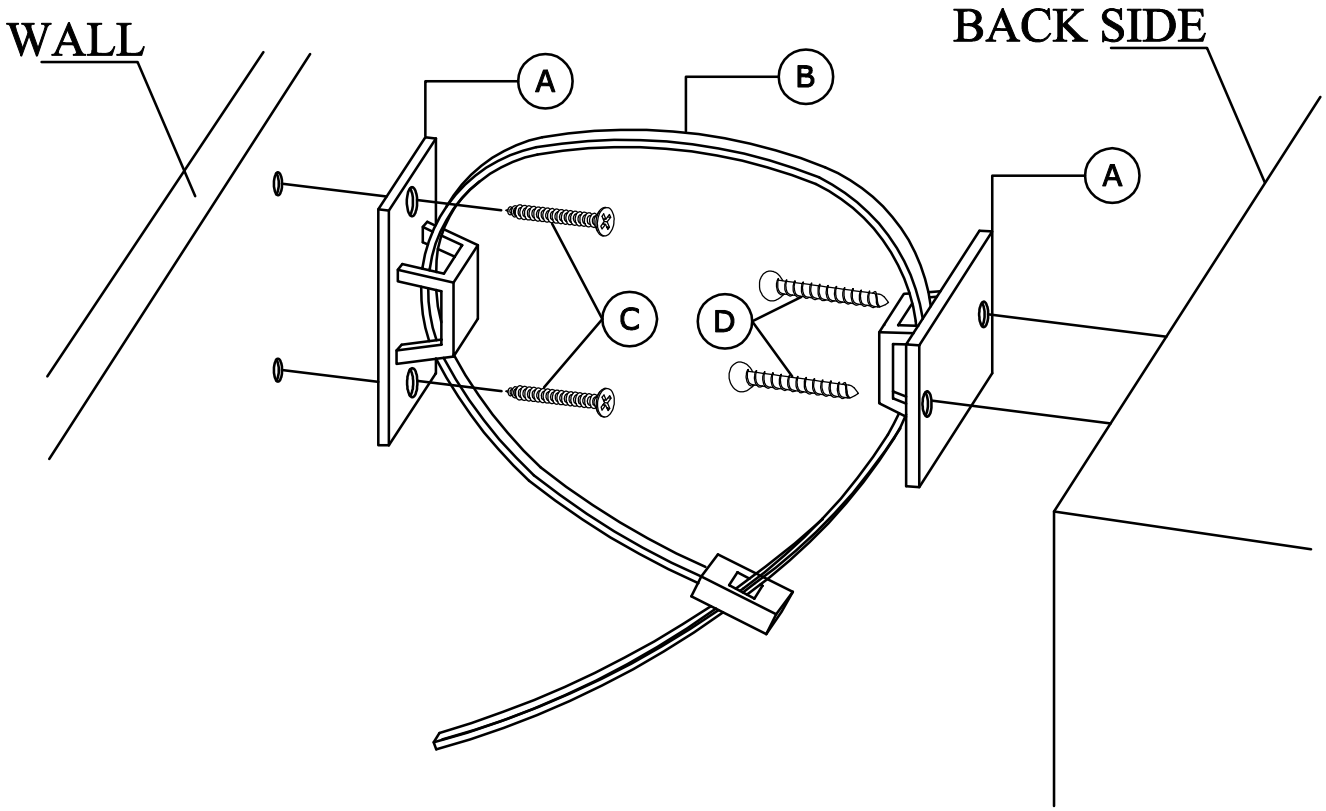

ASSEMBLY COMPLETE

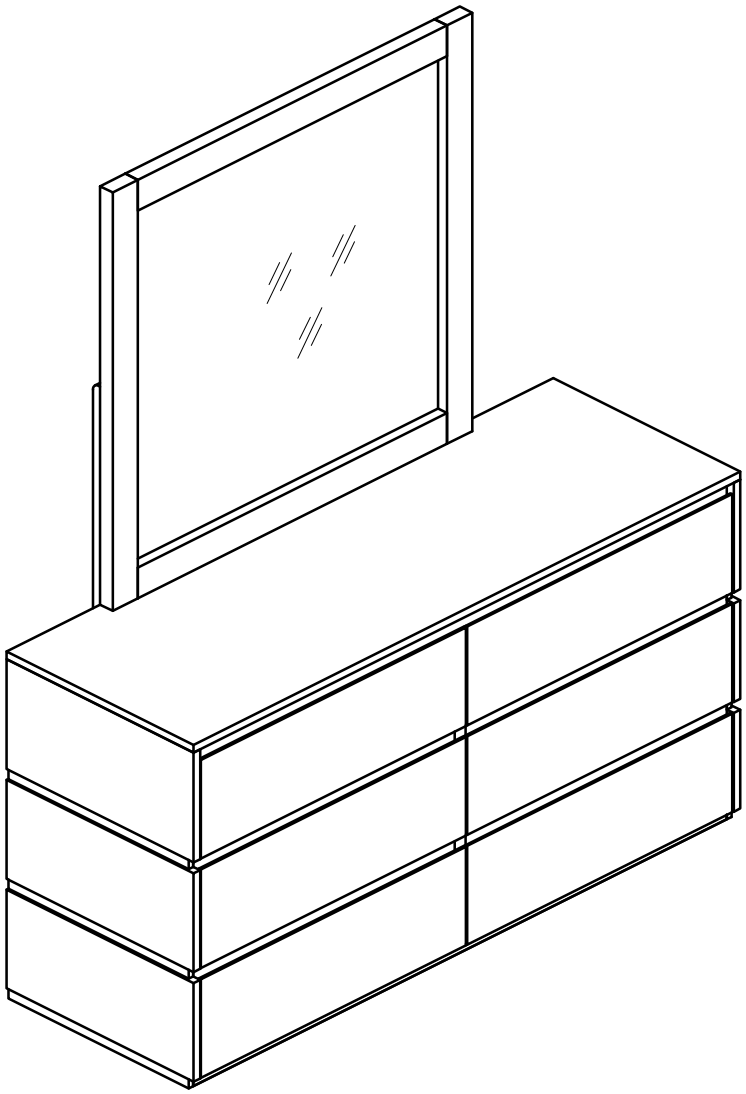

DO NOT PUSH OR DRAG THIS FURNITURE – IT WILL CAUSE DAMAGE TO THE LEGS

Product : **MEDORA DRESSERS & MIRROR**

Item Code : **77301**

Product Care:

As you timber is supplied from sustainable forests there will be natural variations in surface texture and grain like knots, mineral streaks and sap runs that may affect the finish.These differences in character are not defects, but distinctions that make each piece of furniture unique. Our furniture is built to last. Following these steps for basic care should protect your investment for years to come.

- Dust frequently with a clean damp lint-free cloth. This will help remove abrasive build up which can damage a finish over time.
- Do not place hot obiects on any furniture surface. Always use a hot plate or placemat. Laminate and lacquer finishes on table tops provide added scratch and heat resistance to our furniture, but they can still be damaged without proper care.
- Avoid exposing your furniture to strong sunlight, heat outlet, open windows or dampness. Prolonged exposure to direct sunlight can fade the finish of your furniture, while extreme temperature and humidity changes can cause cracking or splitting.
- Do not expose your furniture to any liquids. Never allow water to sit on your furniture. Alcohol, nail polish and perfume are also dangerous as they will dissolve the lacquer finish on contact and may require professional repairs.
- Do not allow plastic to come in direct contact with your furniture. Chemicals in the plastic of placemats etc may soften and mark the finish if left in contact with the furniture for a period of time.