ASSEMBLY INSTRUCTION
MEDORA QUEEN BED
ITEM CODE - 77282
Imported by Amart Furniture Pty Ltd, Qld, Brisbane Australia.
for any assistance to assembly or for missing parts please phone
Amart Furniture, Customer Service Freecall 1800 351 084

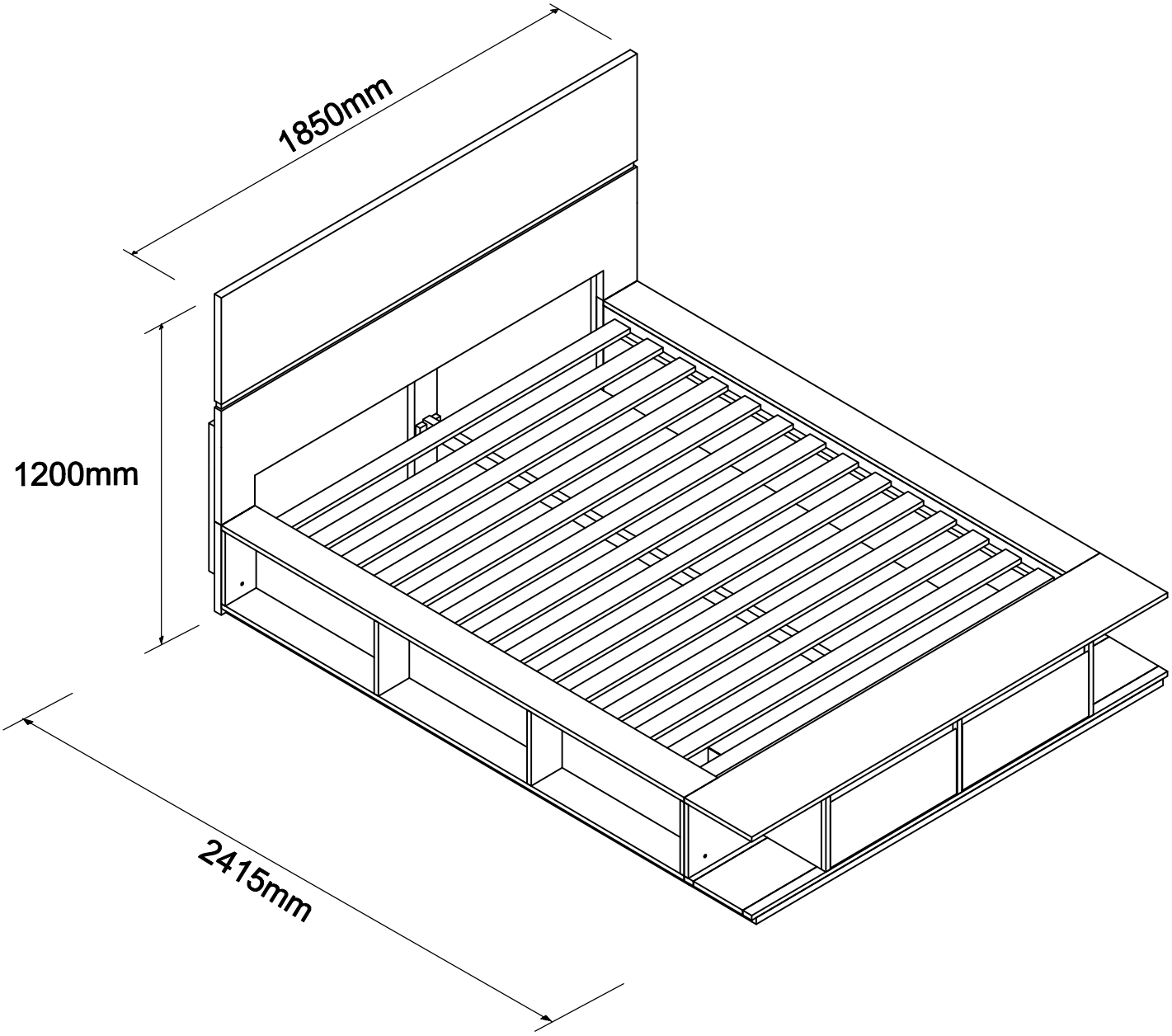

Imported by Amart Furniture Pty Ltd, Qld, Brisbane Australia.
for any assistance to assembly or for missing parts please phone
Amart Furniture, Customer Service Freecall 1800 351 084

PRE-ASSEMBLY PREPARATION

BEFORE YOU START :

1. Choose a clean, level, spacious assembly area. Avoid hard surfaces that may damage the product
2. Take care when lifting. Product should be assembled as near as possible to the point of use
3. Ensure that you have all required contents for complete assembly
4. Always read the assembly instructions carefully before beginning assembly.
5. Keep all hardware parts and packaging out of reach of small children.
6. Do not over tighten the screws and bolts as this may damage the threads

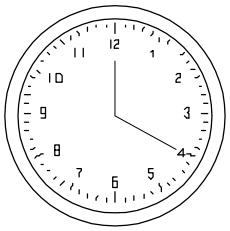	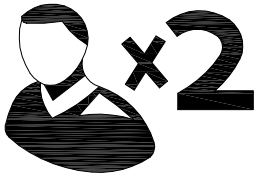
ALLOW 20 MINUTES	2 PEOPLE REQUIRED
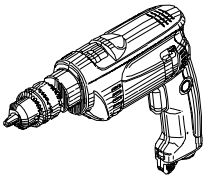 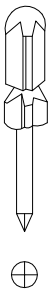 We recommend using screw driver to put this item together. However if you choose to use a power drill it must be used on LOW SPEED (LOW TORQUE) as too much pressure could damage the product.	
ADDITIONAL TOOLS REQUIRED	

PARTS LIST

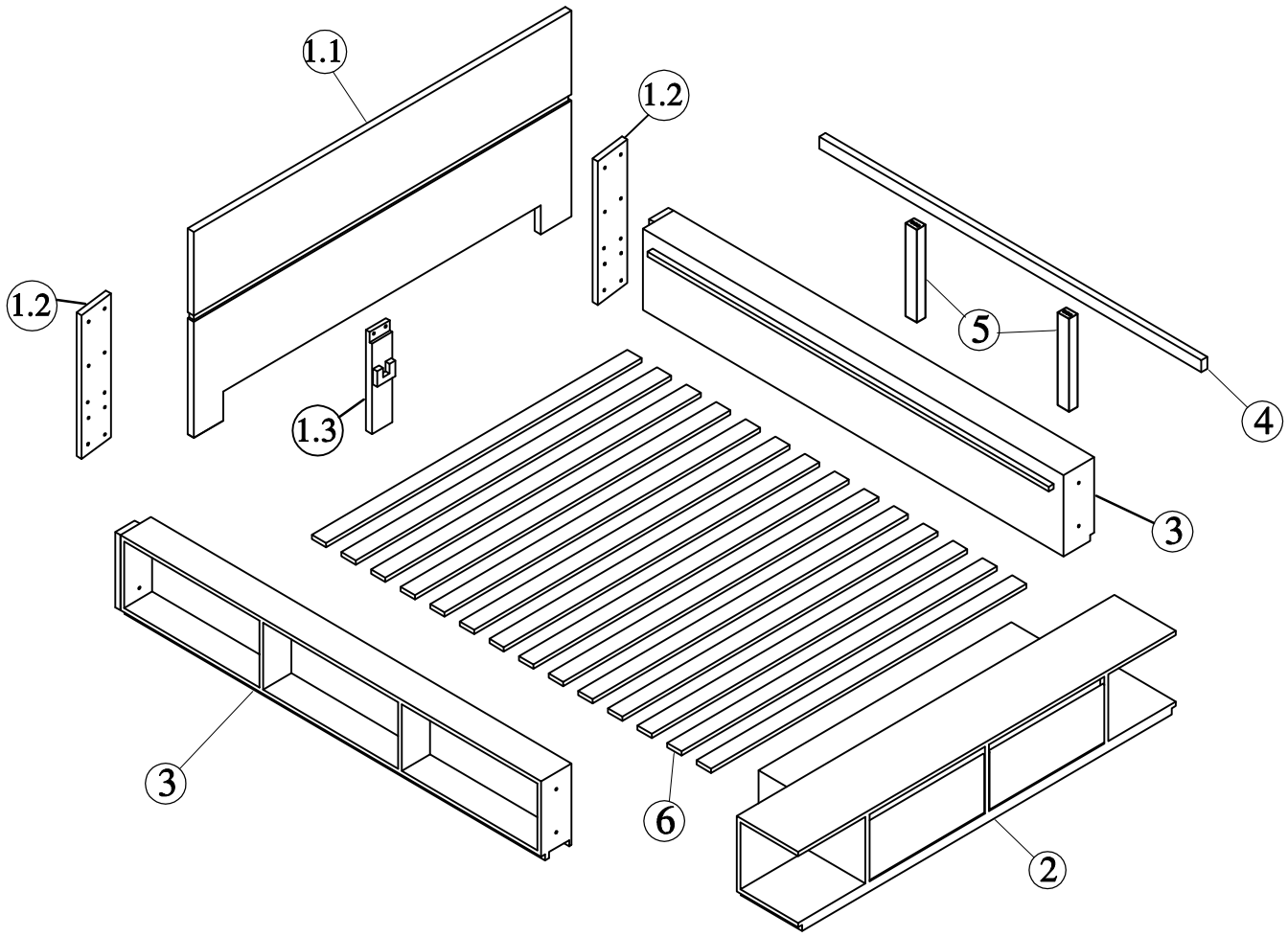

1	HEADBOARD	1pc	1.1 : HEADBOARD PANEL : 1PC 1.2 : CONNECTING RAIL : 2 PCS 1.3 : HEADBOARD CENTRE LEG : 1PC
2	FOOTBOARD	1pc	
3	SIDE RAIL	2 pcs	
4	CENTRAL RAIL	1 pcs	
5	SUPPORT LEGS	2 pcs	
6	SLATS 20 x 70 x 1545 mm	14 pcs	

A. Bolt M8 x 50mm :20pcs	B. Bolt M6 x 35mm :6pcs	C. Washer 2mm x Ø8: 20pcs	C1. Washer 2mm x Ø6: 6pcs	D. Spring Washer 1.2mm x Ø8 :20pcs
D1. Spring Washer 1.2mm x Ø6 :6pcs	E. Bolt M6 x 60mm:2pcs	F. Screw Ø4 x 30mm :28pcs	G. Wood dowel Ø8 x 30mm : 4pcs	H. Allen Key M4 : 1pc

STEP 1

- Attach headboard panel (1.1) to connecting rail (1.2)
- using washer (C), spring washer (D) and bolts (A)
- Tighten with Allen Key (H).

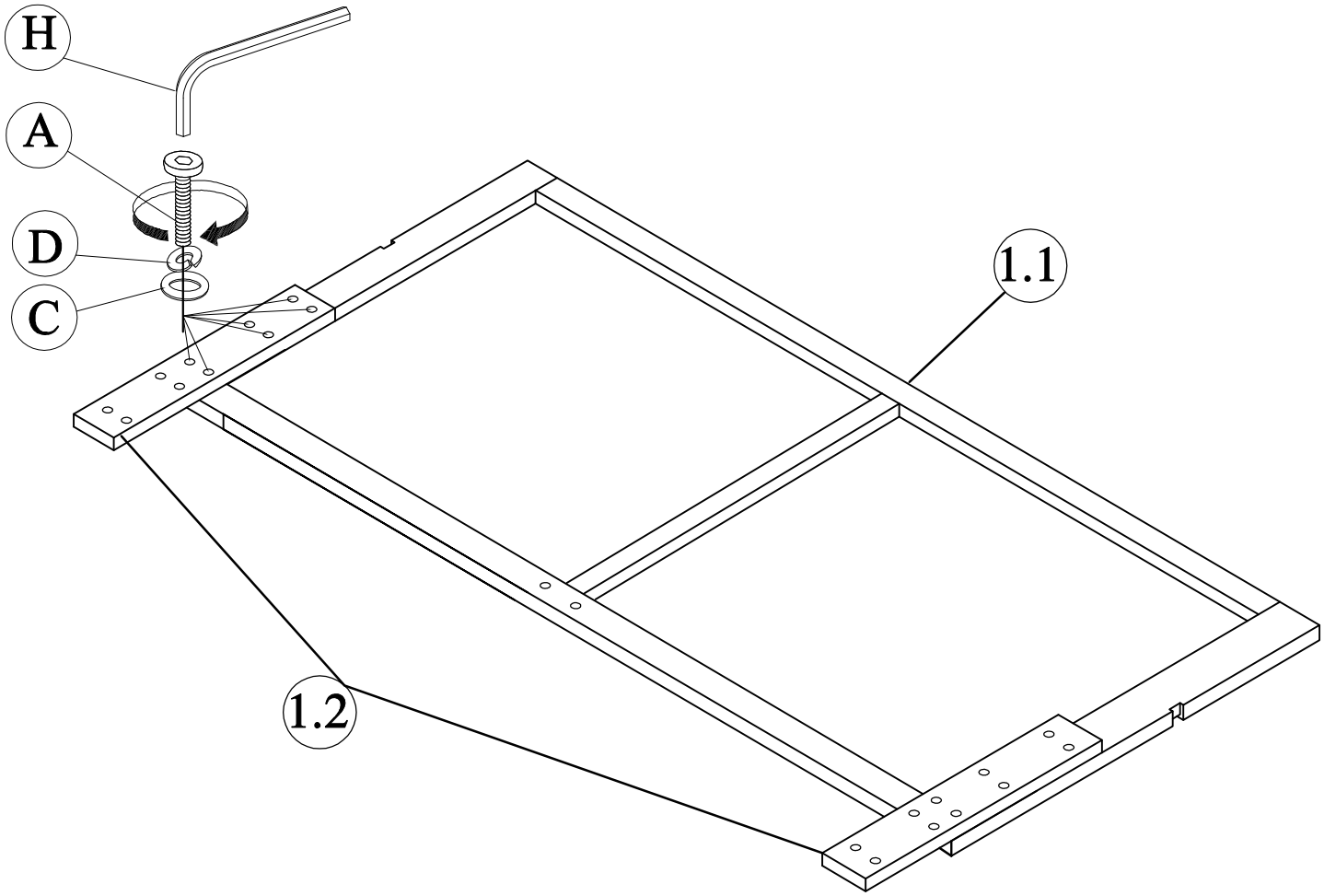

A. Bolt	C. Washer	D. Spring Washer	H. Allen Key
M8 x 50mm 12pcs	2mm x Ø8 :12pcs	1.2mm x Ø8 : 12pcs	M4 1pc

STEP 2

- Attach headboard centre leg (1.3) to headboard panel (1.1)
- Join together using washer (C1), spring washer (D1) and bolts (B)
- Tighten with allen key (H)

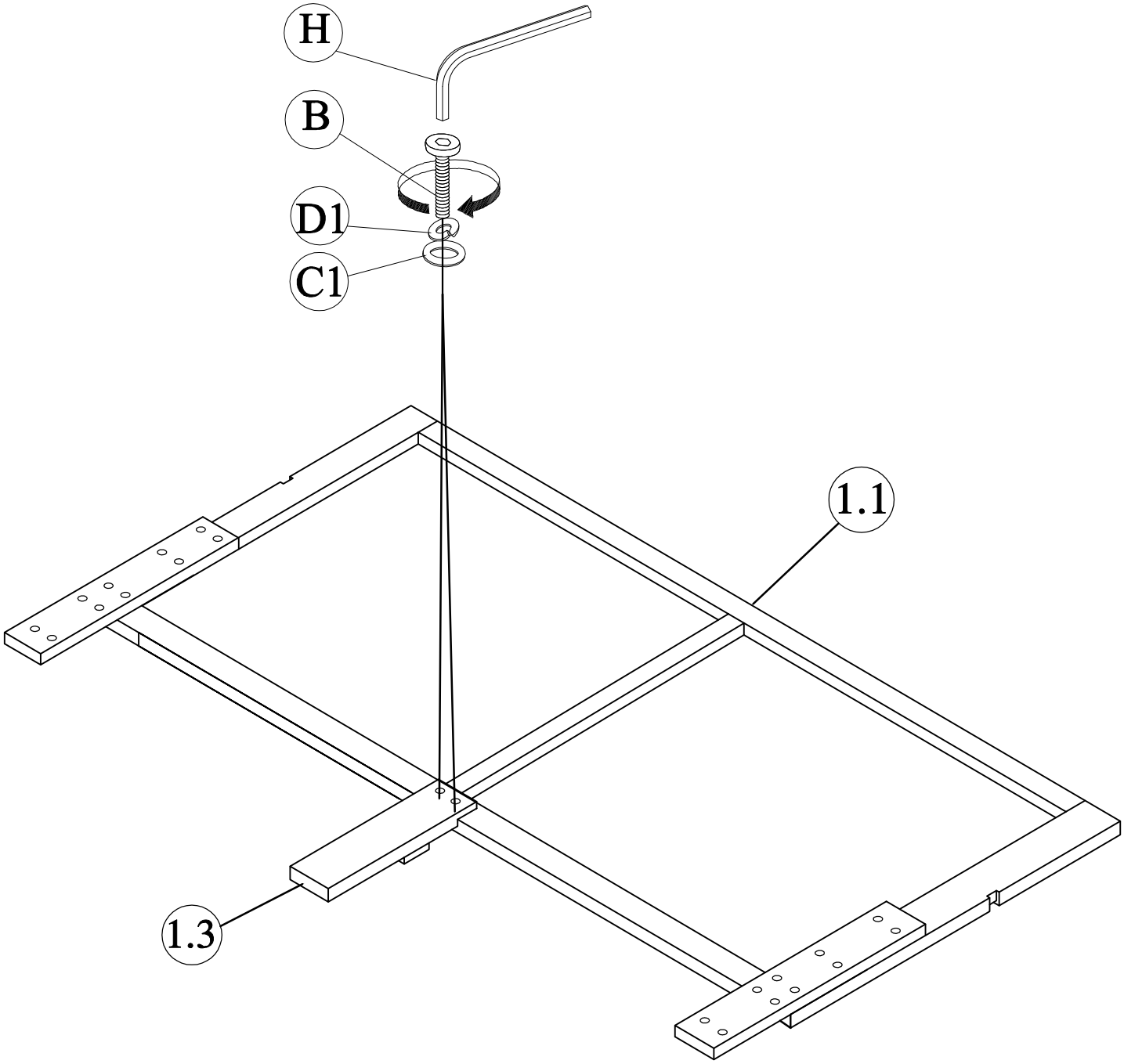

B. Bolt	C1. Washer	D1. Spring Washer	H. Allen Key
M6 x 35mm 2pcs	2mm x Ø6 :2pcs	1.2mm x Ø6 : 2pcs	M4 1pc

STEP 3

- Attach side rail (3) to headboard (1) and footboard(2) using washer (C,C1), spring washer (D,D1) , bolts (A) and bolts (B)
- Tighten with allen key (H)

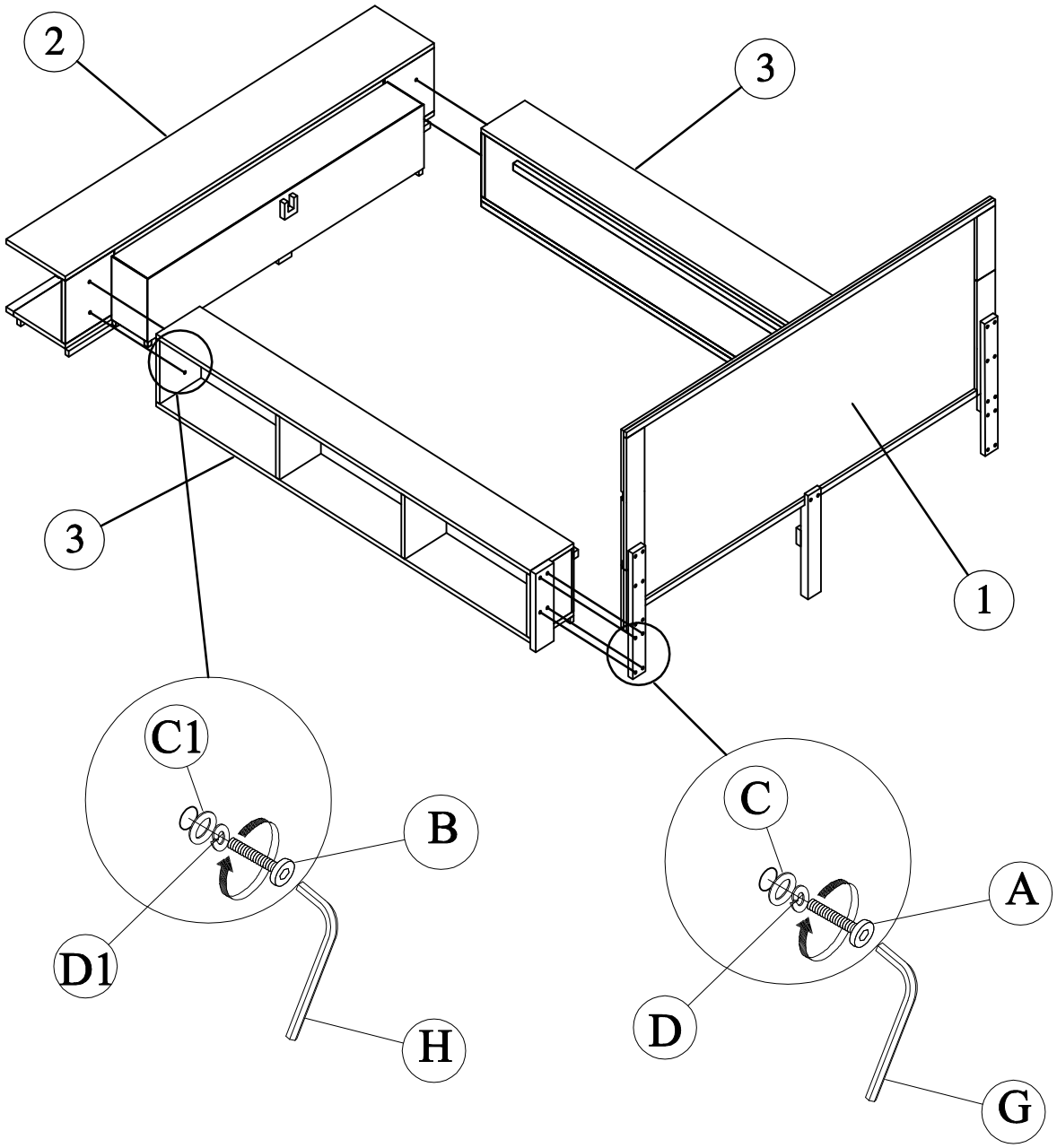

A. Bolt	B. Bolt	C. Washer	D. Spring Washer	C1. Washer	D1. Spring Washer
M8 x 50mm :8pcs	M6 x 35mm :4pcs	2mm x Ø8 :8pcs	1.2mm x Ø8:8pcs	2mm x Ø6:4pcs	1.2mm x Ø6:4pcs
H. Allen Key M4 1pc					

STEP 4

- Attach support legs (5) to centre rail (4) using wood dowel (G)
- Secure together using bolts (E)
- Tighten with allen key (H)

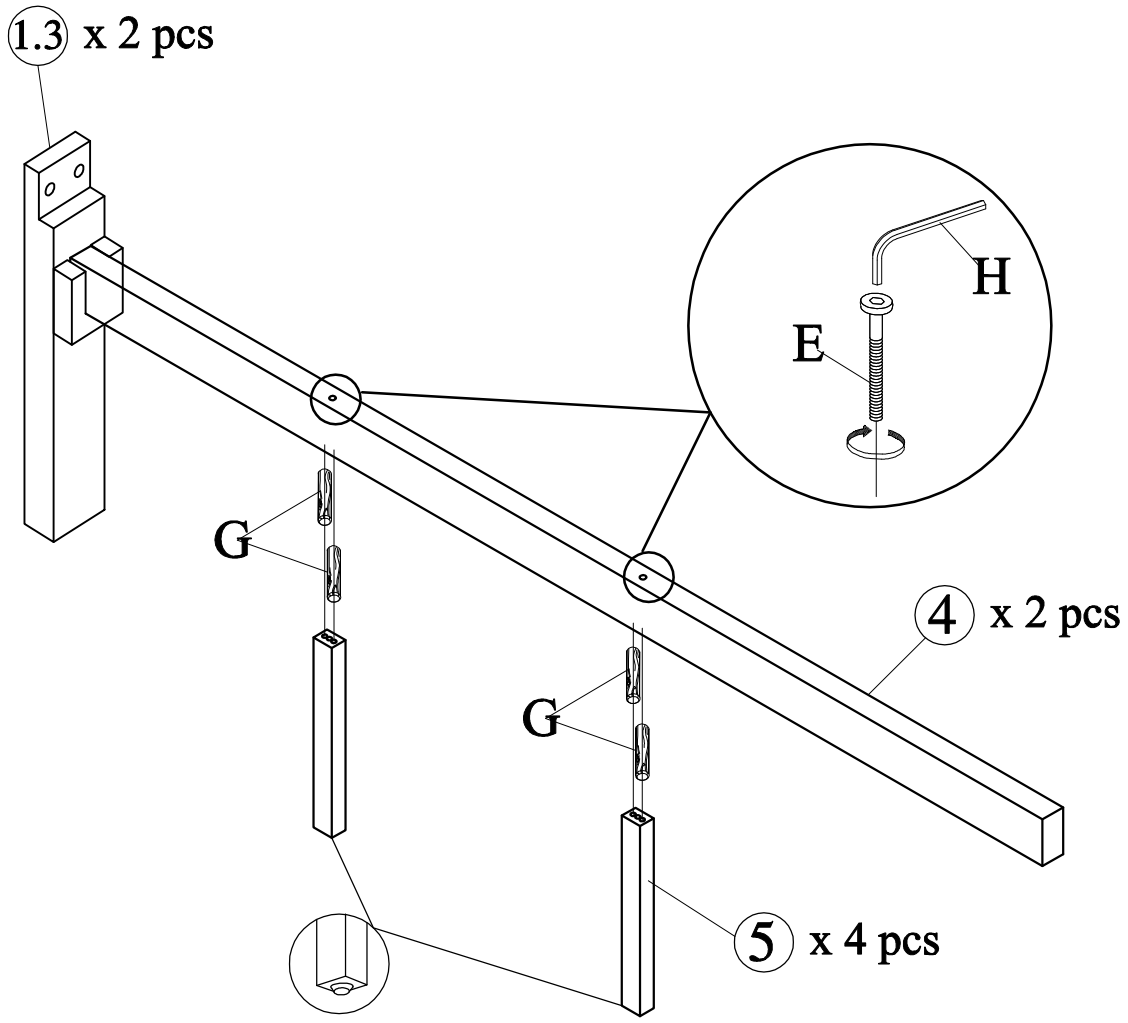

E. Bolt	G. Wood dowel	H. Allen Key
M6 x 60mm 2pcs	Ø8 x 30mm 4pcs	M4 1pc

STEP 5

Slot assembled centre rail (4) into grooves on headboard (1) and footboard (2)

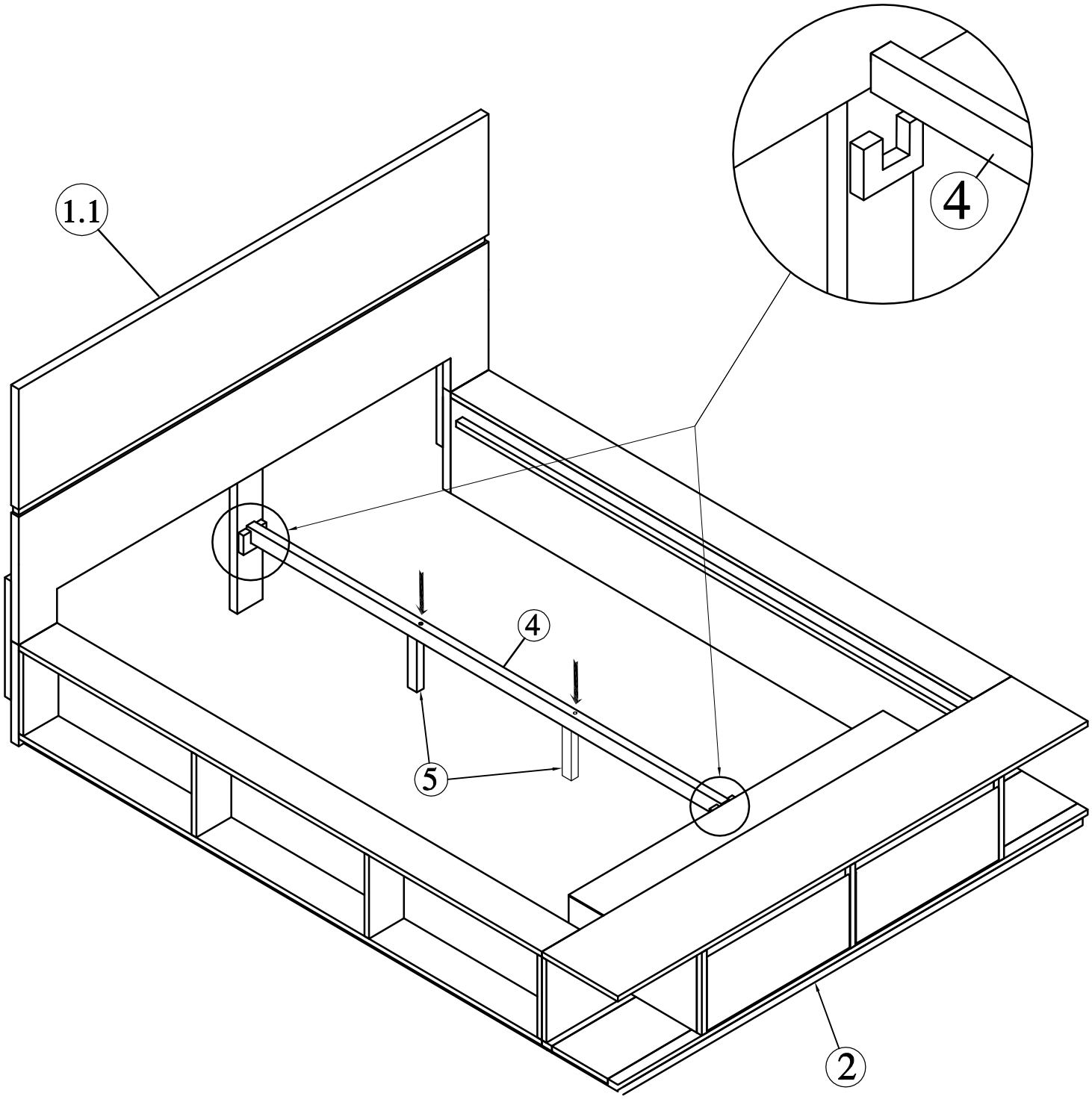

STEP 6

- Attach slats (6) to side rails (3) with screws (F)
- Tighten with screwdriver

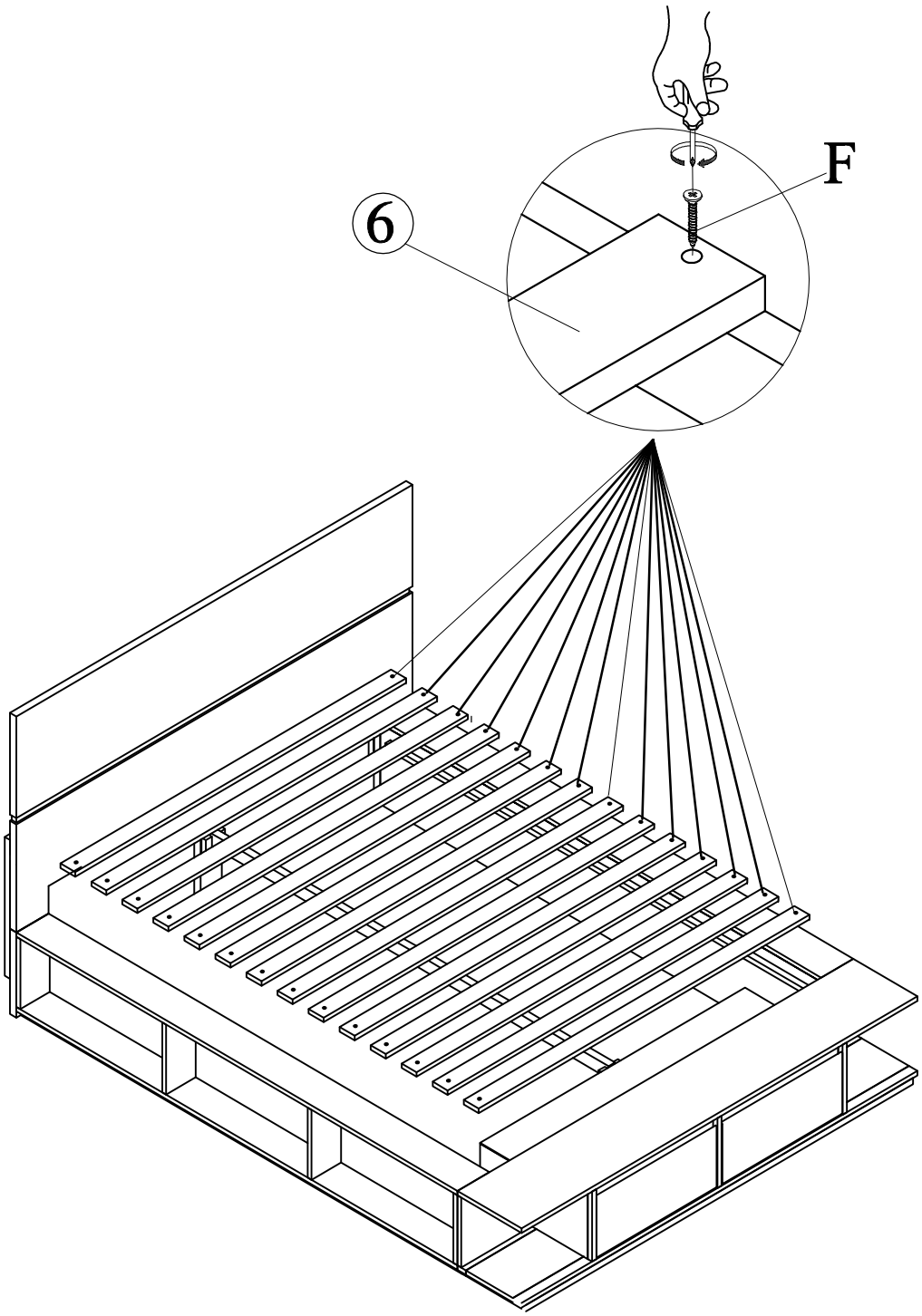

F. Screw 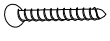 Ø4 x 30mm 28pcs	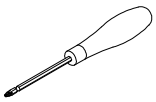

ASSEMBLY COMPLETE

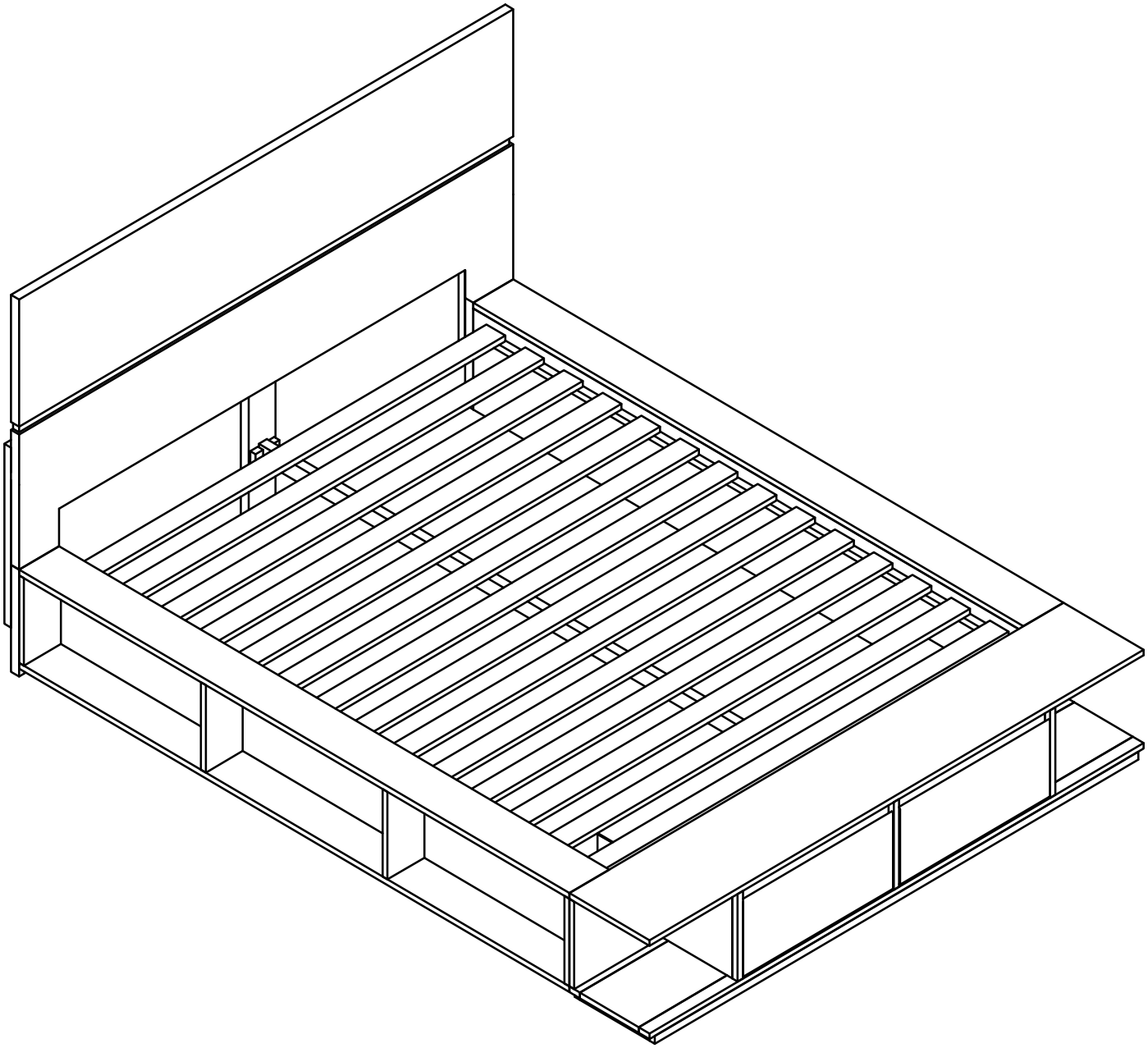

DO NOT PUSH OR DRAG THIS FURNITURE – IT WILL CAUSE DAMAGE TO THE LEGS

Product : **MEDORA QUEEN BED**

Item Code : **77282**

Product Care:

As you timber is supplied from sustainable forests there will be natural variations in surface texture and grain like knots, mineral streaks and sap runs that may affect the finish.These differences in character are not defects, but distinctions that make each piece of furniture unique. Our furniture is built to last. Following these steps for basic care should protect your investment for years to come.

- Dust frequently with a clean damp lint-free cloth. This will help remove abrasive build up which can damage a finish over time.
- Do not place hot obiects on any furniture surface. Always use a hot plate or placemat. Laminate and lacquer finishes on table tops provide added scratch and heat resistance to our furniture, but they can still be damaged without proper care.
- Avoid exposing your furniture to strong sunlight, heat outlet, open windows or dampness. Prolonged exposure to direct sunlight can fade the finish of your furniture, while extreme temperature and humidity changes can cause cracking or splitting.
- Do not expose your furniture to any liquids. Never allow water to sit on your furniture. Alcohol, nail polish and perfume are also dangerous as they will dissolve the lacquer finish on contact and may require professional repairs.
- Do not allow plastic to come in direct contact with your furniture. Chemicals in the plastic of placemats etc may soften and mark the finish if left in contact with the furniture for a period of time.